ECC®

PZD$_2$(W)

系列智能高频开关直流电源屏

Series Intelligent Type High Frequency Switching DC Power Supply Panel

中国·上海中科电气集团

SHANGHAI CHINA-SCIENCE ELE.GROUP, CHINA

上海人民电力设备股份有限公司

SHANGHAI RENMIN ELECTRIC POWER EQUIPMERIL CO., LTD.

ECC
China-Science

概述

PZD2(W)系列智能高频开关直流电源是按照电力部订货技术条件《DL / T459—2000》，及《JB / T 5777.4–2000》电力系统直流电源设备通用技术条件及安全要求。结合多年的直流电源系统的研制及制造经验而开发的新一代无人值守电源系统。它综合了高频开关技术和计算机技术，功率输出单元采用模块化（N+1）冗余设计，监控单元可采用高性能高速PLC或微机，显示操作单元采用新型人机界面触摸屏，可带电热插拔等优点。具有“遥控、遥测、遥信、遥调”功能，是新型的高品质直流操作电源。适用于500KV及以下变电站、发电厂等无人值守场所。

General

PZD2(W) Series Intelligent Type High Frequency DC Switching Power Supply Panel is a new generation of self-operation power supply system developed by ECC as per national standards DL/T459 – 2000 and JB/T 5777.4 – 2000 involving general purpose technical conditions and safety requirements for DC power supplies in electrical systems. With many years' successful development and manufacturing experiences in the field of DC power supply systems, ECC integrates high frequency switching technology with computer technology in this product as a whole resulting in a high quality DC switching power supply featuring "remote control, remote measurement, remote communication and remote regulation" functions. Its power output unit is modularly and redundantly (N + 1) designed, supervising unit may be formed by high performance and quick PLC or PC just as required, and display operating unit is made of new type man-machine interface touching screen. As a matter of fact, it is competently and widely applied in self-operation places such as power plants and substations up to 500kV.

型号含义
Type designation

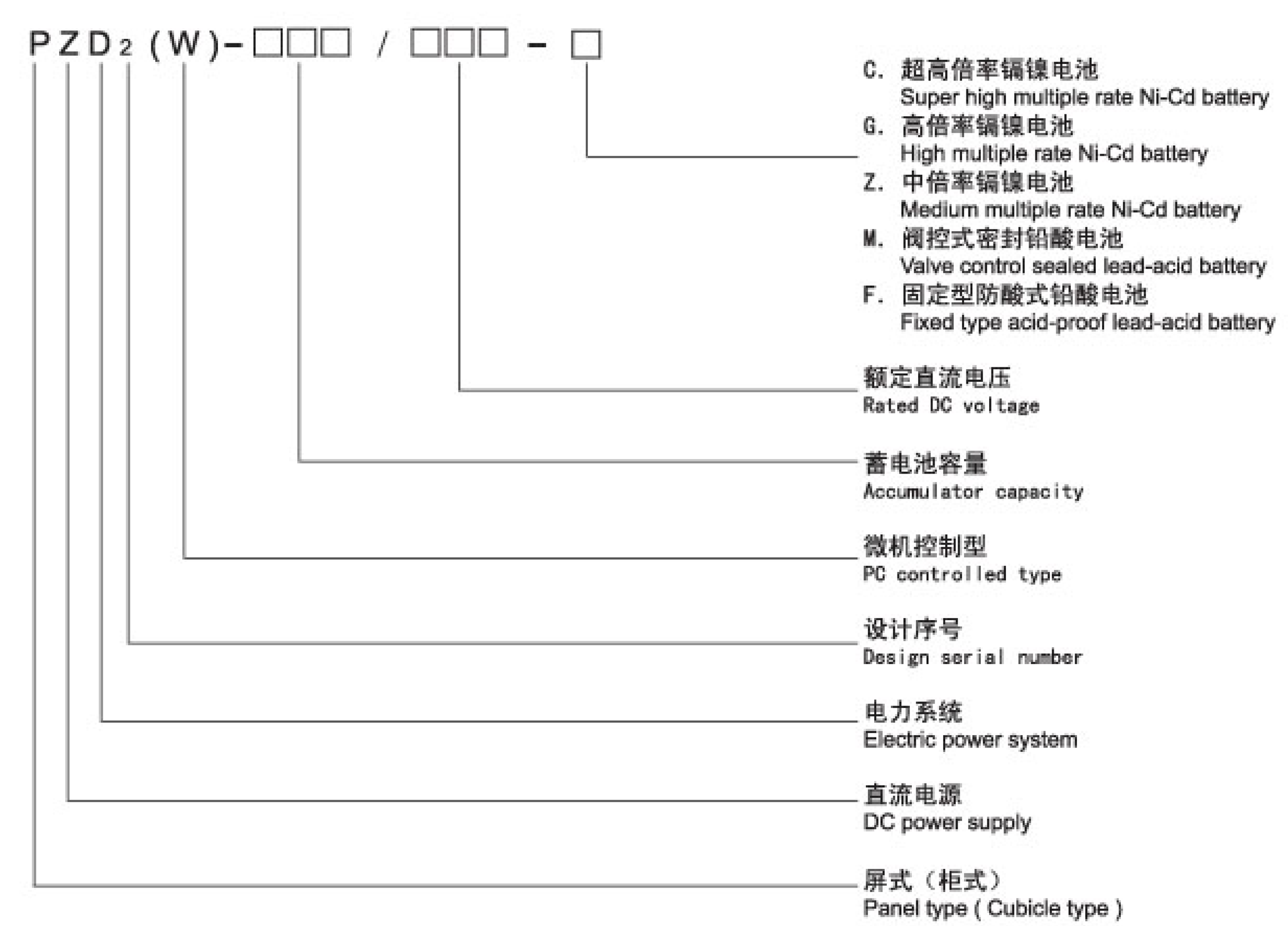

使用条件

- 海拔高度不超过3000m
- 环境温度-5℃～+55℃
- 日平均相对湿度不大于90%
- 无强烈振动和冲击、无强电磁场干扰
- 周围无严重尘土、爆炸性介质、腐蚀金属和破坏绝缘的有害气体、导电微粒及严重有霉菌
- 垂直倾斜度不大于5°

系统组成及特点

- **充电柜**

显示操作单元：PZD_2(W)系列智能高频开关直流电源屏采用新型PMS智能型人机界面触摸屏。操作界面直观，可方便地设置系统的运行参数。多达255幅参数画面可显示系统所有运行参数，包括各单体电池（组）的电压参数。先进的显示屏触摸式操作方式替代了传统的按钮操作，进一步提高了系统的可靠性。

交流配电单元：采用2路交流进线方式，用户可随意接入1路或2路进线。系统按第1路进线优先供电的原则，将交流电分配给各功率模块。

功率输出单元：选用德国Benning原装进口高频开关电源模块或国产高频开关电源模块，采用N+1冗余模式设计，个别模块故障后，将自动退出运行，不影响系统的正常运行。提高了整个系统的可靠性，模块可带电热插拔，使维护工作极其简便。高频开关电源模块采用功率因素校正技术及相位校正技术，减小了系统对电网的谐波影响。双闭环电压，电流调节技术及独特的电流折弯均流技术，使各模块输出电流的分配合理有效，保证了电源系统始终处于最佳运行状态。

监控单元：采用高性能高速PLC（可编程序控制器）或微机，对系统中各组成单元进行实时扫描及控制，向控制母线提供高品质的直流输出。同时根据电池运行的环境温度参数，对电池的均、浮充电压进行V-T曲线控制，使电池处于良好的满容量状态，此外，监控系统对每个电池的电压曲线进行监控，便于对失效电池及时剔除。

- **馈电柜**

直流馈电柜单元：

合闸回路　按用户要求配置10～250A直流断路器

控制回路　按用户要求配置10～40A直流断路器

Working conditions

- Altitude not over 3000 meters above sea level
- Ambient temperature ranging from -5℃ to +55℃
- Relative humidity of daily average not greater than 90%
- No severe vibration nor shock nor powerful electromagnetic field interference
- Places where there are no heavy dust, no potential explosion medium, no adverse gases to corrode metals and damage insulation, no conductive particles, no severe moulds
- Inclination against verticality not greater than 5°

Cubicles and characteristics

- **Recharging cubicle**

Display and operating unit: With new type PMS Intelligent Man-Machine Interface Touching Screen, the operation interface is very apparent and easy to set up all operating parameters. Up to 255 graphic images display all operating parameters including voltage of cell battery (group). Advanced displaying touching screen operation instead of traditional push bottom operation enhances the systematic reliability further more.

AC distributing unit: Two-way AC incoming mode makes customer easy to accept AC power through the first circuit or second circuit as an option. The system distributes AC power to power modules based on priority principle offered to No.1 circuit incoming.

Power output unit: Imported high frequency switching power supply modules originally packed by Benning, Germany or domestic high frequency switching power supply modules are applied with N + 1 redundant design. Whenever a fault occurs in a certain module, the module will automatically be withdrawn from operation without influencing the others, so the reliability of the whole system is thus guarantteed. Still more, plug-in and pull-out modules with live make only a little maintenance work. The application of power factor correction and phase error correction technology in the power supply minimizes the harmonic wave influence of it to the power system. Due to dual loop voltage, current regulation technology and unique current bending equilibrium technology, the output current distribution of each module is reasonable and efficient, ensuring the power supply in optimized operation all the time.

Supervision unit: Configured with high performance and quick speed PLC (programmable logic controller) or PC (personal computer), real time scan and control is realized to components in the power supply and high quality DC output to the control busbar is ensured. Meanwhile, under the V – T curve control on uniform or floating recharging of the batteries according to the ambient temperature parameter of them, the batteries are always in a good condition of full capacity status. Apart from this, the supervision unit supervises voltage curve of each battery, and do away with the invalid batteries in time.

- **Feeder cubicle**

DC feeder cubicle unit:

Closing circuit: 10～250 A DC circuit breaker is configured as per requirement of our customer's;

Control circuit: 10～40 A DC circuit breaker is configured as per requirement of our customer's;

系统功能

检测信息

- 模块工作状态
  - 输入正常 ▾输出正常 ▾限流工作
- 模块工作参数
  - 输出电压 ▾输出电流
- 直流系统工作参数
  - 系统电压 ▾电池电压 ▾负载电流
- 交流系统工作参数
  相电压、线电压

◆ **告警**

- 系统监控单元与模块电源间通信故障
- 模块电源告警：过压、过流、风扇故障
- 直流系统过压、欠压、熔丝断告警、绝缘故障
- 交流系统过压、欠压、停电告警

◆ **现场设置**

系统直流输出电压、模块电源工作状态、蓄电池工作状态、各类告警门限值等。

◆ **蓄电池放电管理**

- 依据电池容量设定最大充电电流
- 按设定的均充间隔时间（一般720小时）对电池例行均充
- 蓄电池放电容量超过其额定容量5%，自动均充
- 均充、浮充手动设置
- 自动检测各单体电池组电压

◆ **保护**

系统监控单元和模块电源均设有完善的保护功能

- 运行模块电源发生故障后，正常模块电源仍可自动均流
- 系统监控单元故障，模块电源维持原来工作状态，不影响正常工作

◆ **四遥控制**

监控中心可对电源系统实现遥信、遥测、遥控、遥调控制：

- 检测整流器状态、工作参数、直流、交流系统所有参数
- 检测各告警信号
- 设置系统电压，电池最大充电电流
- 设置自动均充间隔时间、均充时间和均充电压
- 设置模块电源工作于主用/备用/停用状态

Functions

◆ **Information detection**

- Module working status
  - ▾ input normal ▾ output normal ▾ current limiting operation
- Module working data
  - ▾ input voltage ▾ output current
- DC system parameter
  - ▾ system voltage ▾ battery voltage ▾ load current
  AC system paratmeter
  phase voltage line voltage

◆ **Alarming**

- Communication error between systematic supervision unit and module power supply;
- Module power supply alarming on: over voltage, over current, fan fault;
- DC systematic alarming on: under voltage, over voltage, fuse broken, insulation fault;
- AC systematic alarming on: overvoltage, under voltage, break down.

◆ **Site setup**

The systematic output voltage, module power supply working status, accumulator working status, various alarming gate values etc..

◆ **Accumulator discharging management**

- Setup maximum recharging current in light of battery capacity;
- Setup uniform recharging time interval to the battery, normally 740 hours;
- Automatic uniform recharging to the batteries if they discharge exceeding 5% of the rated discharging capacity;
- Manual operation for uniform and floating recharging;
- Automatic measurement of the voltage on single battery bank.

◆ **Protection**

Perfect protection functions are offered to systematic supervision unit and module power supply:

- When a fault occurs in an operating module, the normal module power supplies will automatically maintain constant current;
- When a fault occurs in the systematic supervision unit, the module power supply will maintain the original state.

◆ **Four kinds of remote operations**

The supervision center is able to realize four remote operations on the power supply, i.e., remote communication, remote measurement, remote control and remote regulation.

- Detection of status, working parameters of rectifier, detection of all parameters of DC and AC power systems;
- Detection of various alarming signals;
- Setup systematic voltage, maximum recharging current of the batteries;
- Setup automatic uniform recharging voltage, time and its time interval;
- Setup the module power supply in status of master, spare and stop.

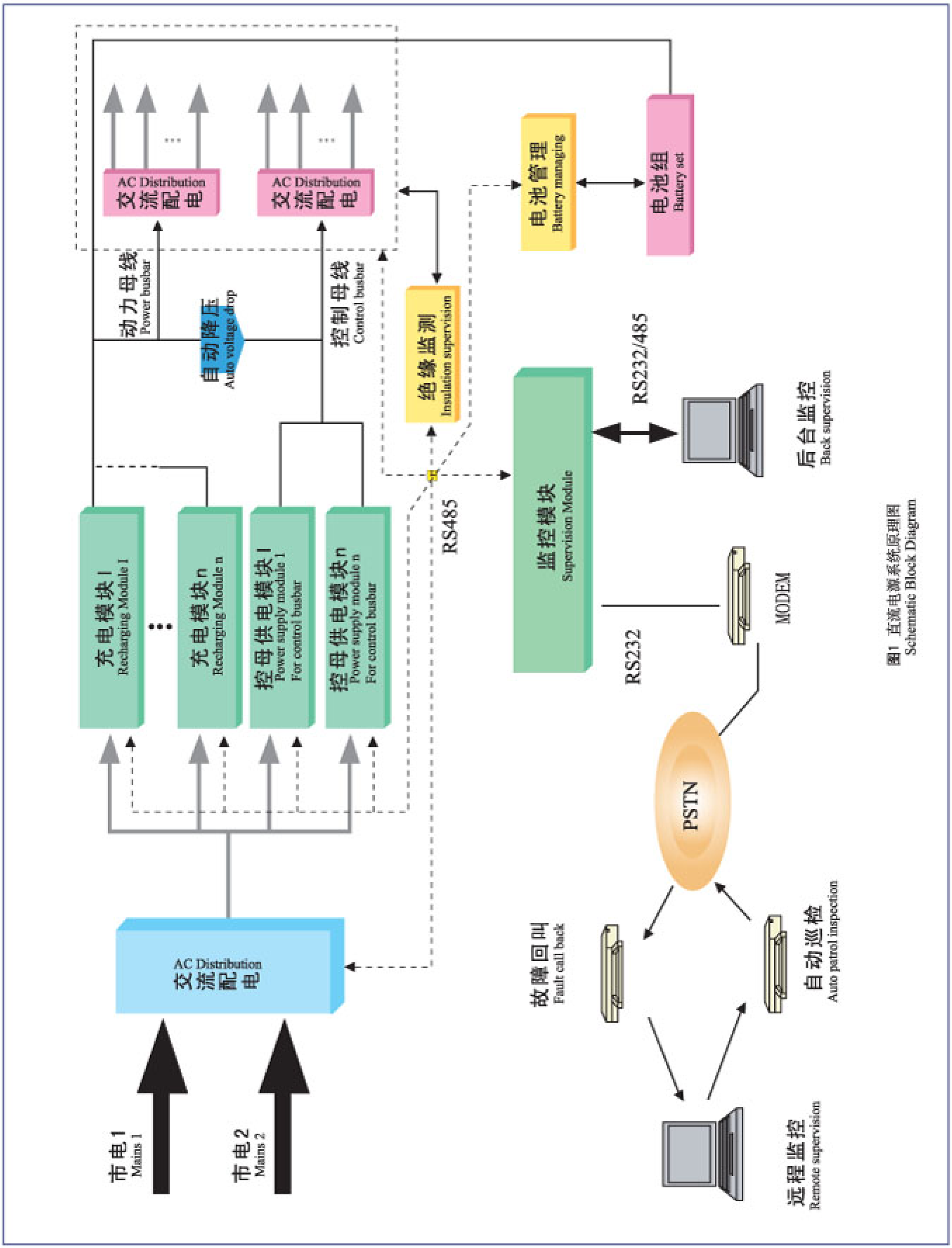

图1 直流电源系统原理图
Schematic Block Diagram

高频开关电源模块技术参数及指标 Technical data of high frequency switching power supply modules

表1

项 目 Description	指 标 Values			测试条件 Measuring conditions
	最小值 Min.	典型值 Typical	最大值 Max.	
输入电压范围（VAC） Input voltage	260	380	456	额定输出，满载 Rated output, full load
输出可调范围（VDC） Output adjustable	180	240	300	额定输出，满载 Rated output, full load
稳压精度 Voltage stabilizing accuracy		0.1%	0.1%	输出(Output)198–286VDC，20–100%负载(load)，输入(Input)260–456VAC
稳流精度 Current stabilizing accuracy		0.5%	0.5%	输出(Output)198–286VDC,20–100%负载(load)，输入(Input)260–456VAC
动态响应 Dynamic response	100uS	208uS	500uS	额定输出20%–75%负载跃变 Rated output, 20~75% load sudden change
充电机效率 Efficiency rate of recharger	90%	91%	93%	输出240V，90%负载 Output 240V, 90% load
最大可闻噪声 Max. heard noise		45	50	满载，环境噪音40Db Full load, ambient noise 40dB
存储温度（℃） Storage temperature	–40	35	60	
工作环境温度（℃） Ambient temperature	–5	25	55	输出240V，满载 Output 240V, full load
宽频杂音（mv） Wide frequency noise		25	40	额定输入输出 Rated output and input
峰峰杂音(mv) Buzzing noise	50	100	400	额定输入输出 Rated output and input
并机均流度过 Parallel connecting current uniform	± 1%	± 3%	± 5%	额定出入输出 Rated output and input
启动延时（秒） Time delay for start up	1	2	3	
纹波系数 Ripple coefficient	0.01% ~ 0.1%			频宽0 ~ 40MHz Frequency band 0 ~ 40MHz
绝缘 Insulation	2000VAc 50Hz			时间1分钟，漏电流10mA Leakage current 10mA for 1 minute
内部散热器温升 Temperature rise on internal radiator	1级（100%的额定输出电流时连续工作） Level I (Continuous work at 100% output current)			在充电浮充电电压范围 In the voltage range of charging and float charging current
自动限流特性 Automatic current limiting	恒功率保护，输出电流不会增大，直流输出电压下降 Constant power protection: output current won't increase as DC output voltage decreases			浮充电下运行，交流输入超过110%额定电流 Under float charging condition, output current over 110% rated current
输入电压保护 Input voltage protection	自动关闭整流模块停止输出电流 Auto shut down rectifier and stop output current			浮充电下运行，交流输入电压超过整定值 Under float charging condition, AC input voltage over setting value
输出电压保护 Output voltage protection	自动停止输出电流 Auto stop output current			浮充电压下运行，输出电压超过整定值 Under float charging condition, output voltage over setting value

续表1

项 目 Description	指 标 Values	测试条件 Measuring conditions
输出短路保护特性 Output short circuit protection	故障消除后，自动恢复正常运行 Auto restore normal operation after fault cleared away	浮充电压下运行，输出因故障短路 Under float charging condition, output short circuited by fault
输出电流 Output current	5A，10A，20A，30A	
单机重（5A）模块 Weight of single 5A module	5Kg	
最小尺寸Minimum dimension（mm）	320 × 120 × 213	
接口定义Interface	RS232、RS485	
冷却方式Cooling mode	智能温控型强迫风冷 Intelligently temperature controlled forcing wind cold	
可靠性设计Reliability	N+1冗余redundant	
工作环境Working environment	室内Indoor	
面板显示Panel indication	直观的输出电压值、输出电流值显示Direct indicator for output voltage and current values	
输入缺相保护功能 Phase lack protection on input	有Yes	
过温保护 Over temperature protection	90 ± 5℃	
监控功能 Supervision	最小单片机系统，标准上位机接口及标准工业控制接口 Minimum single chip system, standard upstream interface and standard industrial controlled interface	

高频开关直流电源系统与常规直流电源系统性能比较
Comparing list between high frequency switching DC power supply and traditional DC power supply

表2

技术指标内容 Description	高频开关直流电源系统 High frequency switching DC power supply	常规直流电源系统 Traditional DC power supply
稳压稳流精度 Voltage and current stability accuracy	≤0.5%	≤2%
纹波系数 Ripple coefficient	0.1%	≤2%
源效应 Source effect	0.05%	≤2%
负载效应 Load effect	0.1%	≤3%
效率 Efficiency	≥90%	≤75%
功率因素Power factor	≥0.95动态校正dynamic correction	≤0.6
开机涌流 Starting inrush	电子控制，无 No inrush by electronic control	感性负载，有 Yes, inductive load
可靠性 Reliability	高，N+1冗余 High, N + 1 redundant	低，1+1冗余 Low, 1 + 1 redundant
系统结构 Systematic structure	模块化并联结构Modular parallel connected	柜（屏）式结构 Cubicle (panel)
监控功能 Supervision function	完善 Perfect	具备系统操作管理功能 With systematic operation management function
体积重量 Volume and weight	小，轻 Compact and light	大，重 Bulk and heavy
电池管理功能 Battery management function	完善 Perfect	一般General

PZD_2(W)系列智能高频开关直流电源屏可通过公众电话网与远端计算机进行双向通讯联系。（见上图）

PZD_2(W)系列智能高频开关直流电源屏通过公众电话网向远端计算机传送直流电源柜的工作运行参数（发送“遥测”、“遥信”信号），同时接收远端计算机对PZD_2(W)系列智能高频开关直流电源屏的控制（接收“遥控、遥调”信号），如在上海通过公众电话网从电网调度中心用中央计算机或手提电脑对远在海南岛的PZD_2(W)系列智能高频开关直流电源屏的运行参数进行调整，监测运行状态。

Dual communication between remote computer and PZD2(W) Series Intelligent Type High Frequency DC Switching Power Supply Panel may be realized via a public telephone network. That is to say, the Panel may transmit its operation parameters in “remote measurement and remote communication” signals via a public telephone network to a remote computer, and on the other hand, it also receives control from a remote computer in “remote control and remote regulation” signals in the same means.

Therefore, the Panel located in Hainan Island can easily be regulated and supervised with a central computer or even portable computer in an electric power dispatching center in Shanghai, about 2000 kilometers away or so, via a telephone network only.

方案
Scheme

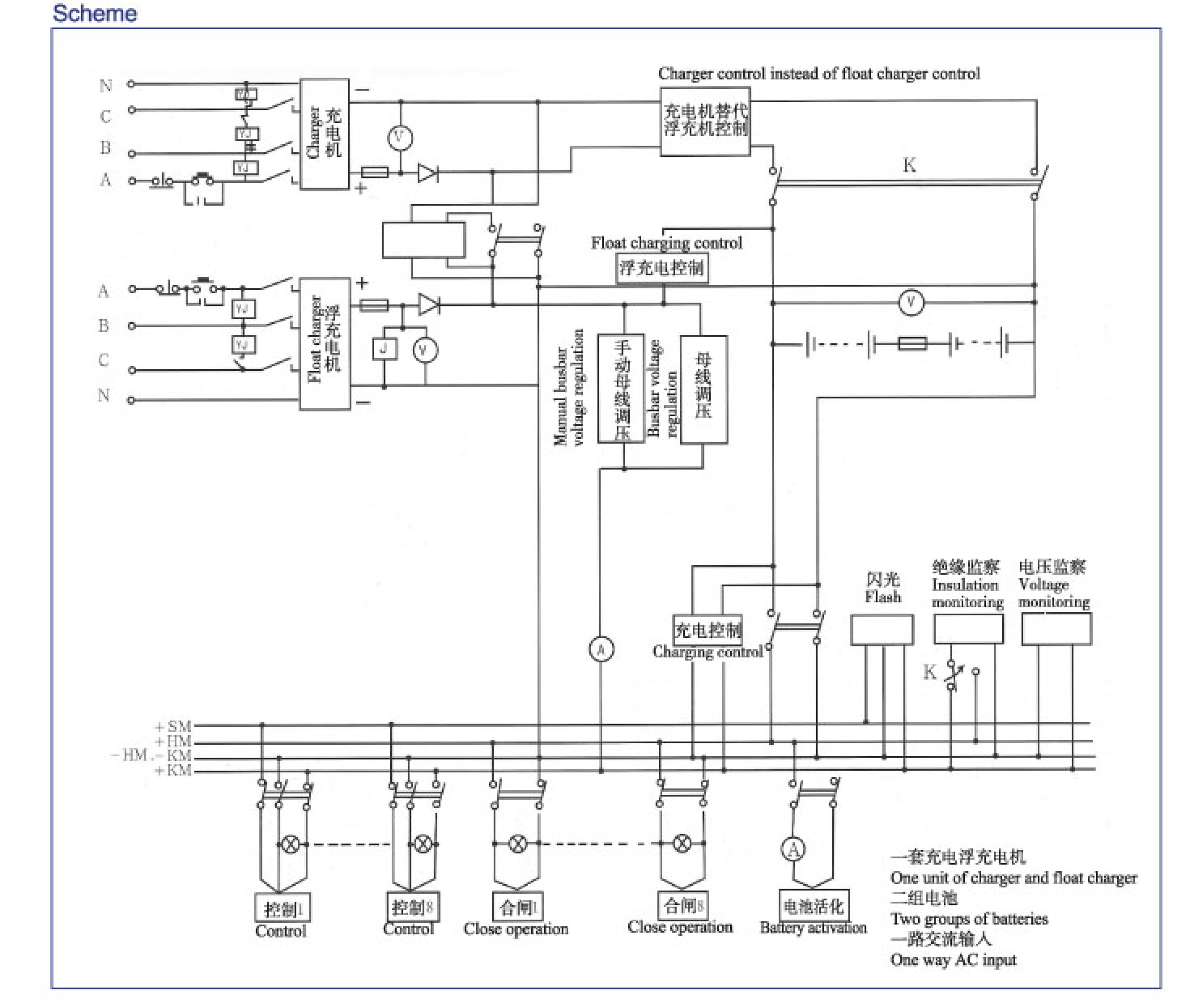

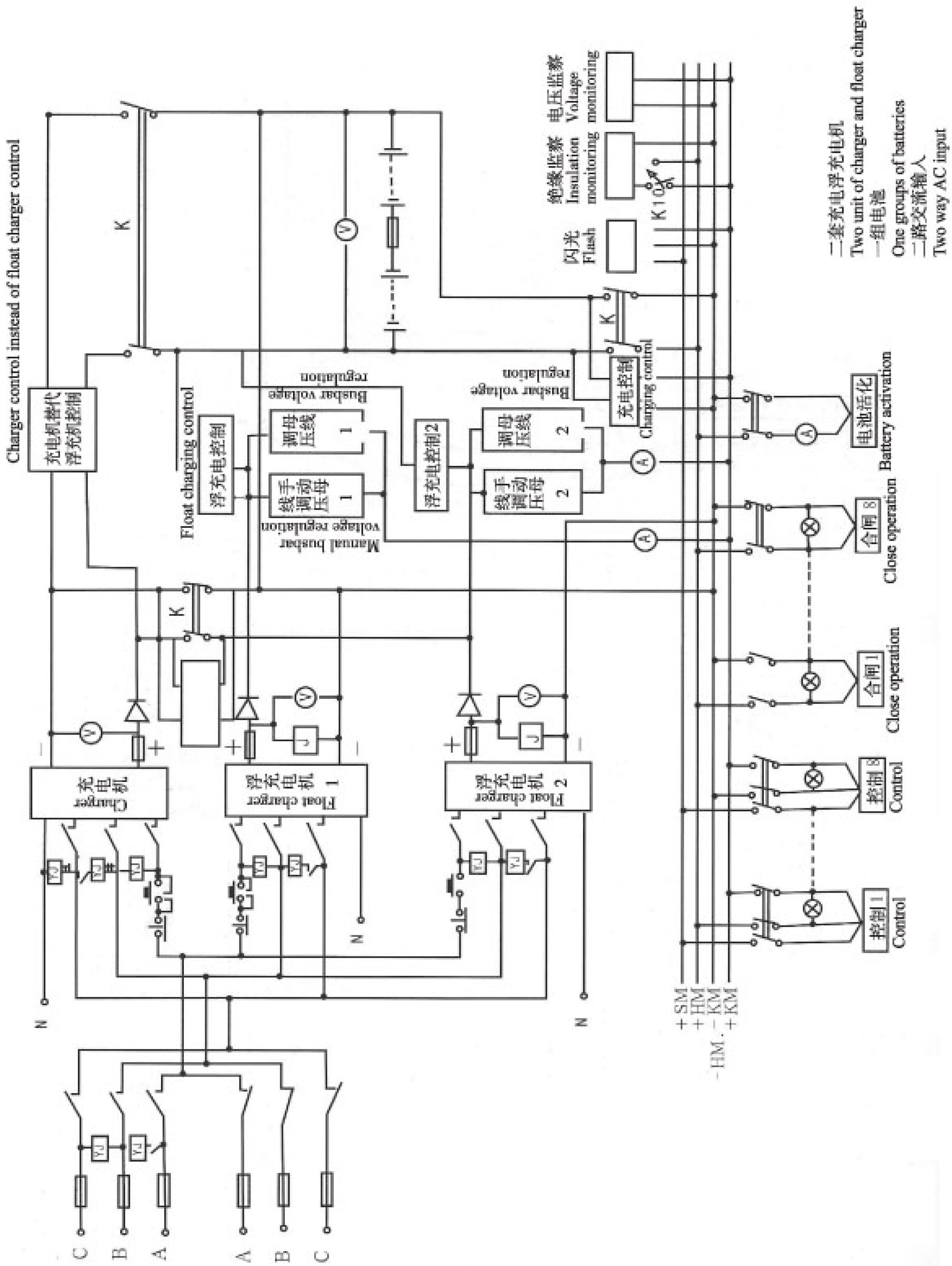
Charger control instead of float charger control
充电机替代浮充机控制
K
Float charging control
浮充电控制
Busbar voltage regulation
调母压线 1
线手动调压母 1
Manual busbar voltage regulation
浮充电控制2
调母压线 2
线手动调压母 2
Busbar voltage regulation
充电控制
Charging control
闪光
Flash
绝缘监察
Insulation monitoring
电压监察
Voltage monitoring
K 10
电池活化
Battery activation
合闸 8
Close operation
合闸 1
Close operation
控制 8
Control
控制 1
Control
二套充电浮充电机
Two unit of charger and float charger
一组电池
One groups of batteries
二路交流输入
Two way AC input
+SM
+HM
-KM
+KM
-HM.
Charger
充电机
Float charger 1
浮充电机 1
Float charger 2
浮充电机 2
YJ
N
C
B
A

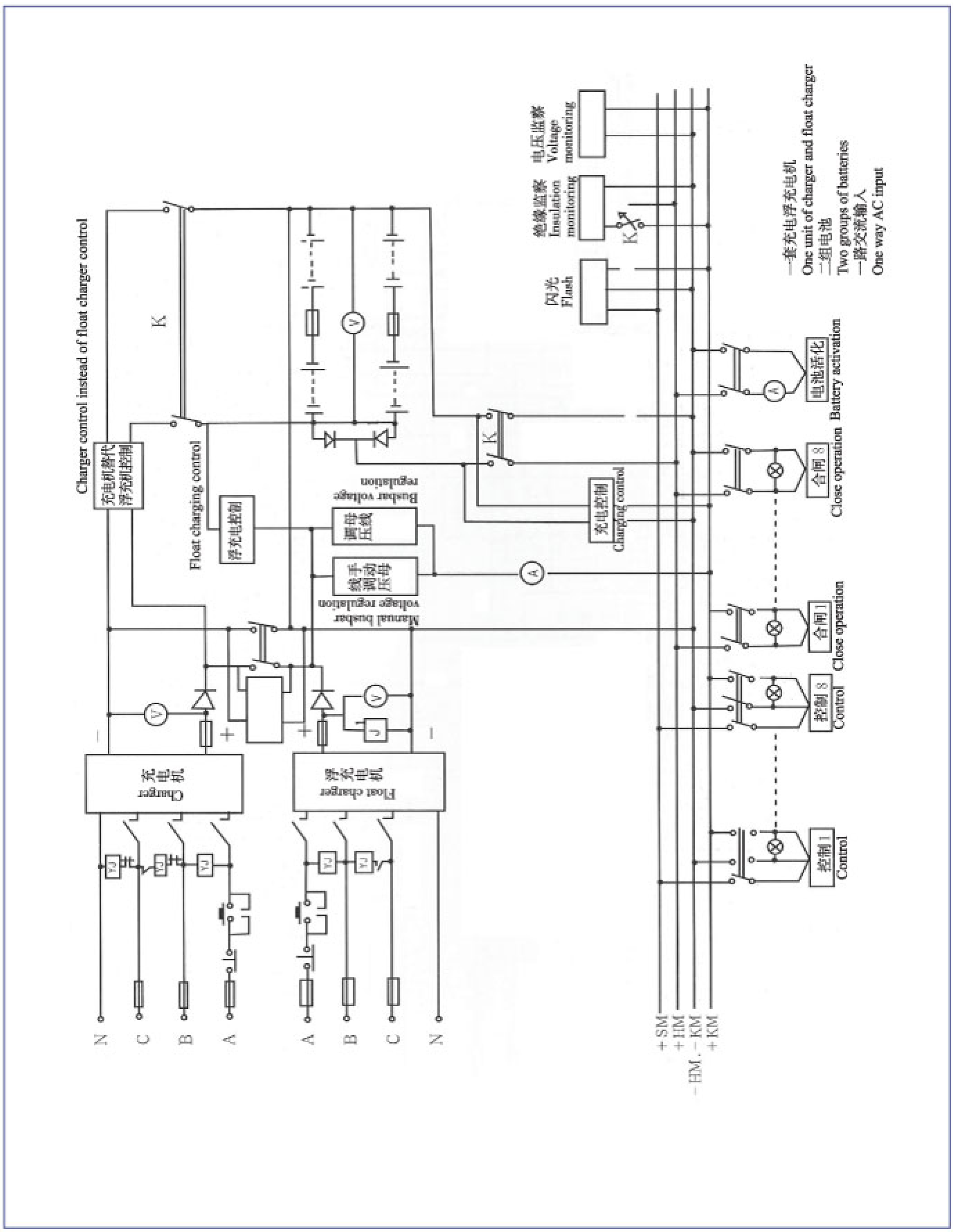
Charger control instead of float charger control
充电机替代浮充机控制
K
Float charging control
浮充电控制
Busbar voltage regulation
母线压调
Manual busbar voltage regulation
手动调压母线
Charger
充电机
Float charger
浮充电机
N
C
B
A
A
B
C
N
充电控制
Charging control
闪光
Flash
绝缘监察
Insulation monitoring
电压监察
Voltage monitoring
一套充电浮充电机
One unit of charger and float charger
二组电池
Two groups of batteries
一路交流输入
One way AC input
电池活化
Battery activation
合闸8
Close operation
合闸1
Close operation
控制8
Control
控制1
Control
+SM
+HM
-KM
+KM
-HM.

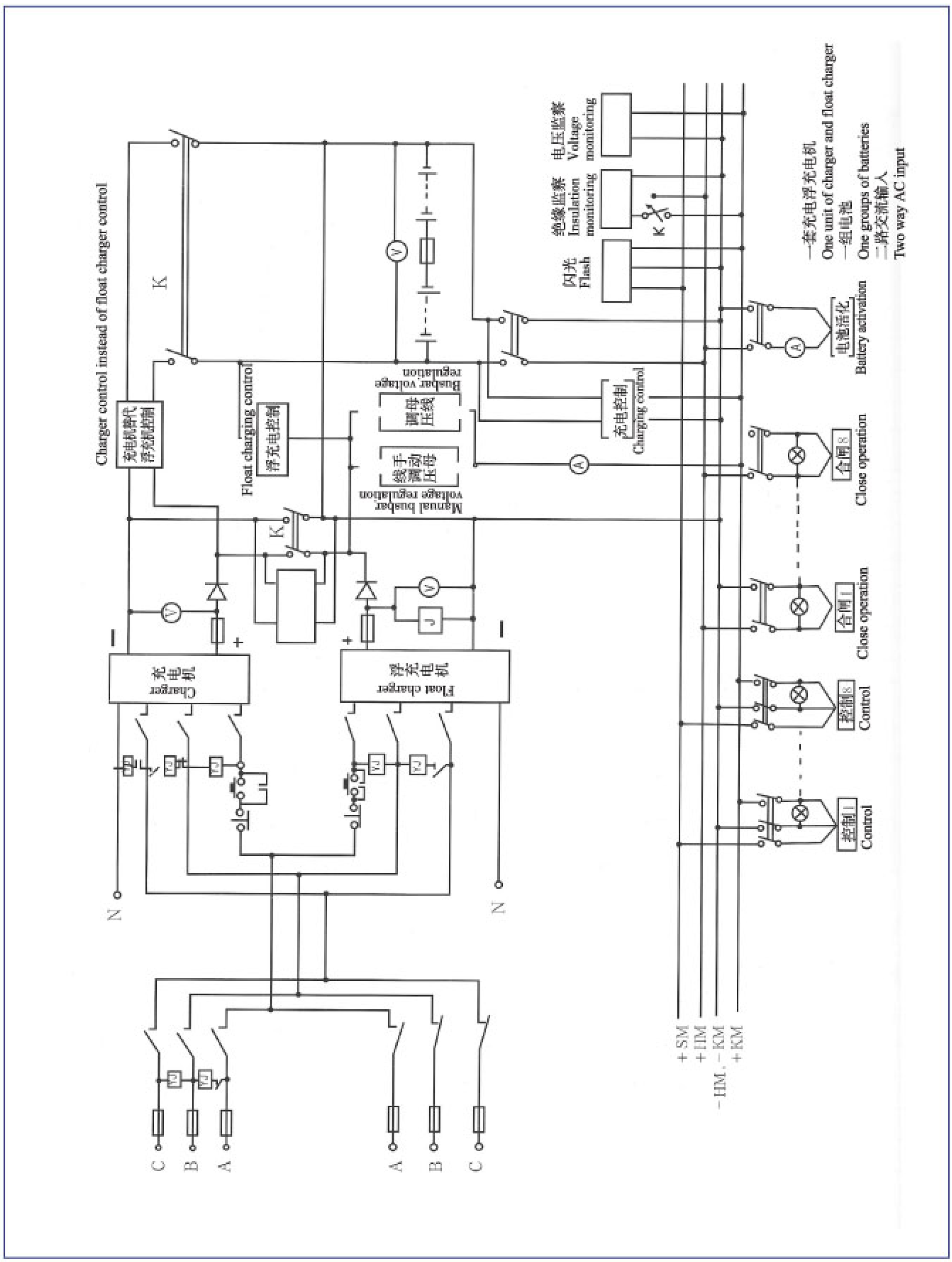
Charger control instead of float charger control
充电机替代浮充机控制
K
Float charging control
浮充电控制
Busbar voltage regulation
母线压装置
Manual busbar voltage regulation
手动压母线装置
Charger
充电机
Float charger
浮充电机
N
N
C
B
A
A
B
C
闪光
Flash
绝缘监察
Insulation monitoring
电压监察
Voltage monitoring
充电控制
Charging control
电池活化
Battery activation
合闸8
Close operation
合闸1
Close operation
控制8
Control
控制1
Control
一套充电浮充电机
One unit of charger and float charger
一组电池
One groups of batteries
二路交流输入
Two way AC input
+SM
+HM
-HM, -KM
+KM

ECC 上海中科电气(集团)有限公司
SHANGHAI CHINA - SCIENCE ELECTRIC (GROUP) Co.,Ltd.

JS-PZD-070512C

总　部:上海市四川北路1666号高宝新时代广场9楼
总　机:021-63568888　传　真:021-63252222
浦东工业园:上海市沪南路3738号
高科技工业园:上海市新坦瓦公路（近申江路）
Http: // www.ecogroup.com.cn
E-mail: ecc@eccgroup.com.cn

网络实名：中科电气集团 高低压开关柜集团
通用网址：ECC　中科电气集团 上海中科集团 电器成套设备 高低压成套开关设备 上海电气网 中国电气交易网 欲知更多系列产品，请点击 WWW.ECCGROUP.COM.CN 或电话：021- 63257711